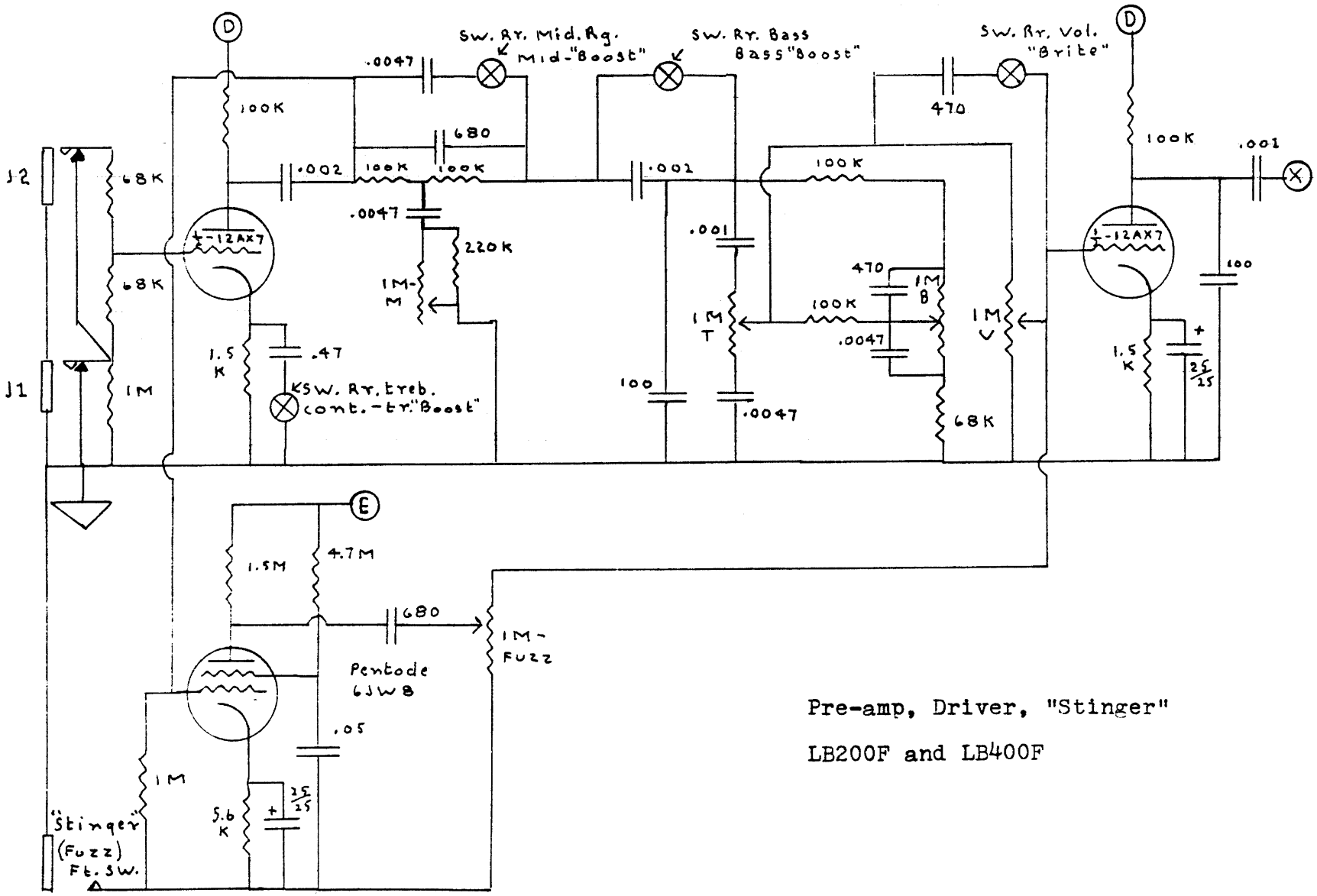

Pre-amp, Driver, "Stinger"

LB200F and LB400F

LB200F & 190'S **POWER SUPPLY**

Garnet

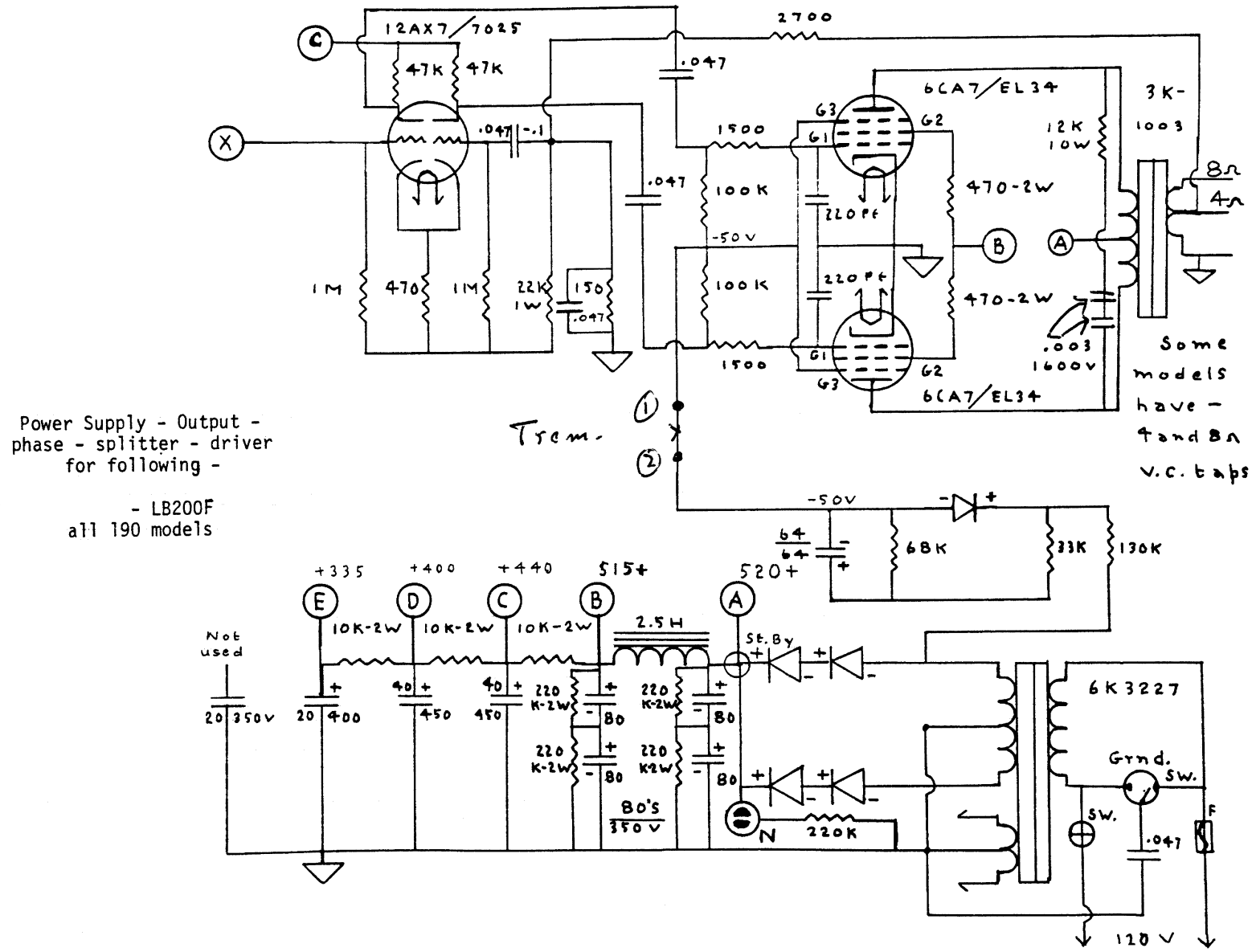

Power Supply - Output - phase - splitter - driver for following -

- LB200F
all 190 models