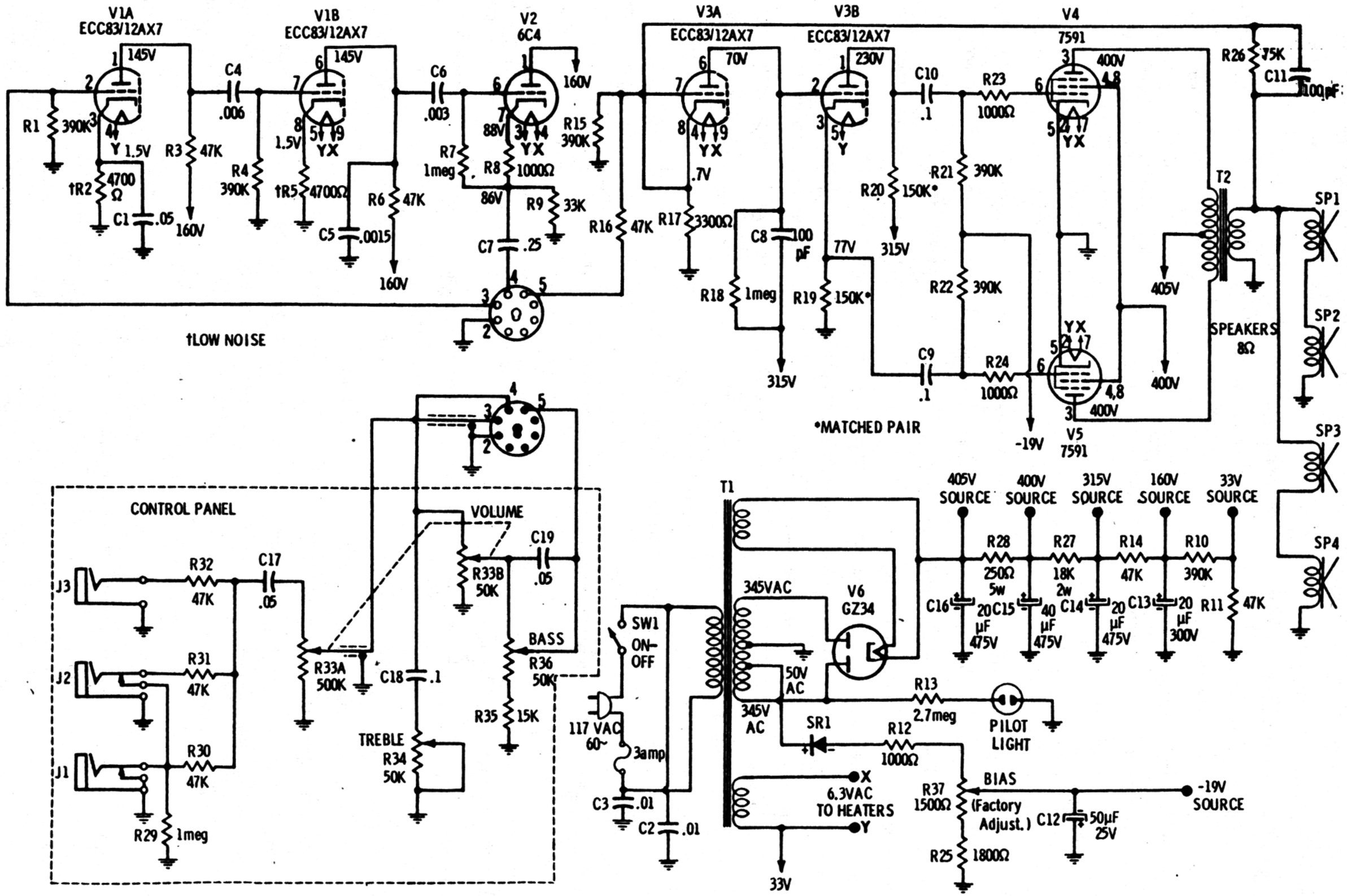

Harmony Model H-322