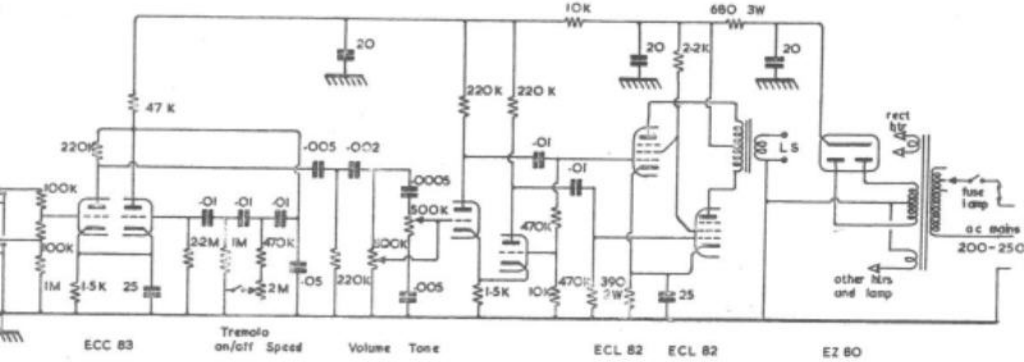

ECC 83 ECL 82 EZ 80

Voltages indicated should be taken only as a guide
Some early models had a 250 volt HT supply
Resistors are rated ¼ watt unless otherwise stated

p 2/11/60

W/O/T amplifier

WATKINS ELECTRIC MUSIC LONDON

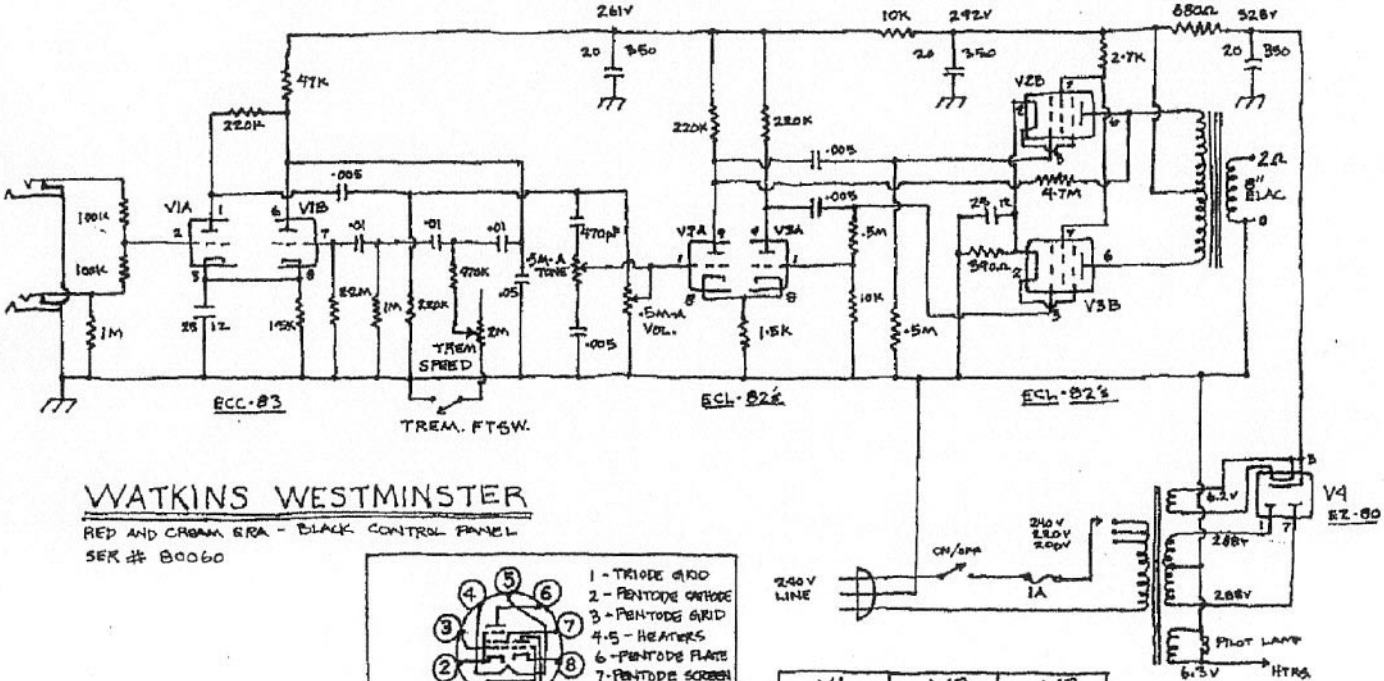

WATKINS WESTMINSTER

RED AND CREAM ERA - BLACK CONTROL PANEL

SER # 80060

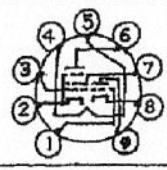

1 - TRIODE GRID
2 - PENTODE CATHODE
3 - PENTODE GRID
4,5 - HEATERS
6 - PENTODE PLATE
7 - PENTODE SCREEN
8 - TRIODE CATHODE
9 - TRIODE PLATE

THE ECL-82 IS A 9-PIN MINIATURE TUBE WITH A TRIODE AND A PENTODE SECTION. THE TRIODES ARE USED FOR THE PHASE INVERTER.

V1	V2	V3
PIN 1 - 1.99V	PIN 2 - 26.8V	PIN 2 - 26.8V
PIN 3 - 1.73V	PIN 6 - 284V	PIN 6 - 284V
PIN 6 - 1.99V	PIN 7 - 260V	PIN 7 - 260V
PIN 8 - 1.73V	PIN 8 - 2.06V	PIN 8 - 2.06V
DRN: Mahan	PIN 9 - 1.95V	PIN 9 - 1.99V