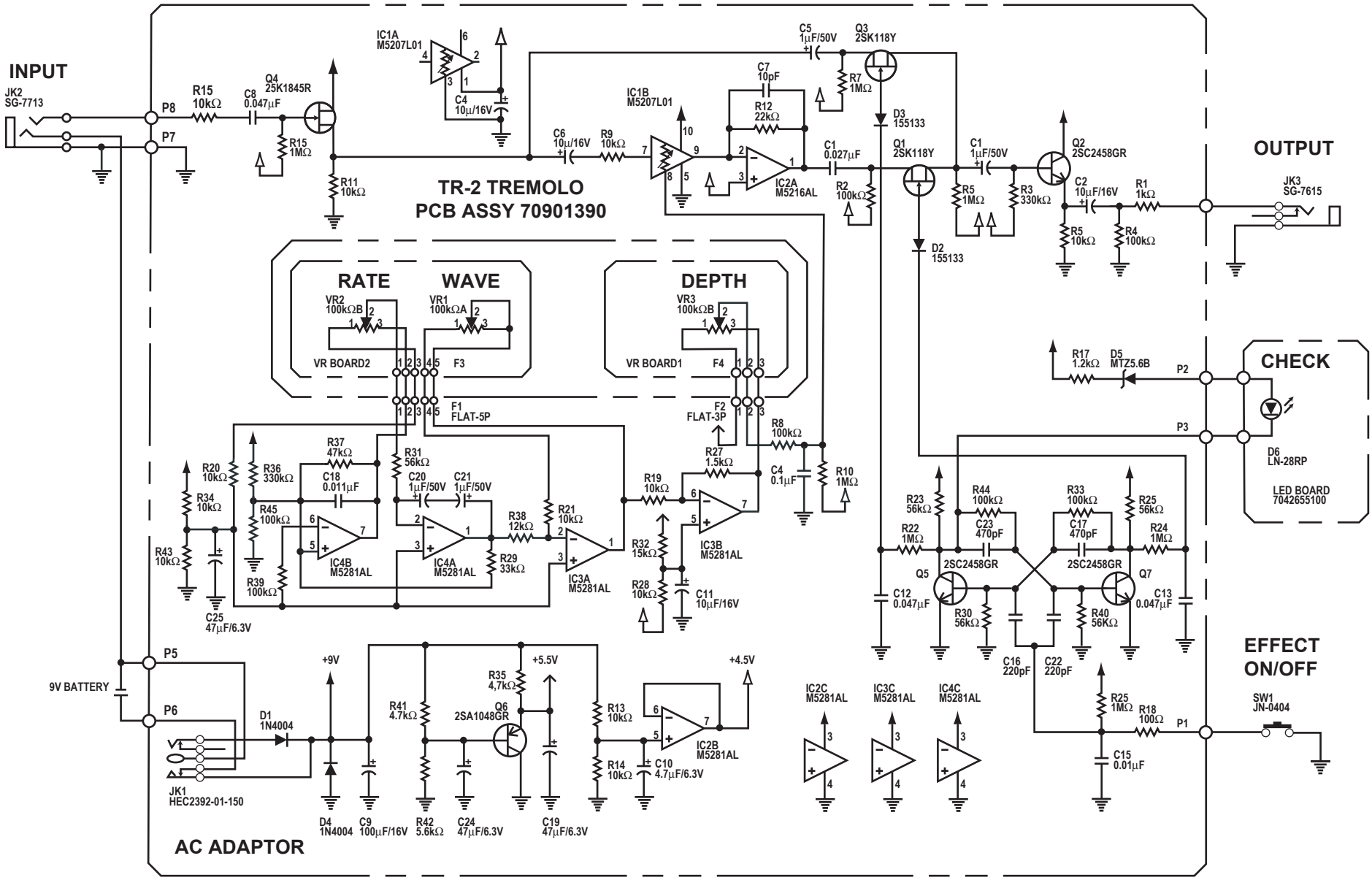
INPUT
JK2
SG-7713
P8
P7
R15
10kΩ
C8
0.047μF
Q4
25K1845R
R15
1MΩ
R11
10kΩ
IC1A
M5207L01
C4
10μ/16V
TR-2 TREMOLO
PCB ASSY 70901390
C6
10μ/16V
R9
10kΩ
IC1B
M5207L01
C7
10pF
R12
22kΩ
IC2A
M5216AL
C5
1μF/50V
Q3
2SK118Y
R7
1MΩ
D3
155133
C1
0.027μF
Q1
2SK118Y
R2
100kΩ
D2
155133
C1
1μF/50V
R5
1MΩ
R3
330kΩ
Q2
2SC2458GR
C2
10μF/16V
R1
1kΩ
R5
10kΩ
R4
100kΩ
OUTPUT
JK3
SG-7615
RATE
WAVE
VR2
100kΩB
VR1
100kΩA
VR BOARD2
F3
DEPTH
VR3
100kΩB
VR BOARD1
F4
F1
FLAT-5P
F2
FLAT-3P
R8
100kΩ
R27
1.5kΩ
C4
0.1μF
R10
1MΩ
R17
1.2kΩ
D5
MTZ5.6B
P2
P3
CHECK
D6
LN-28RP
LED BOARD
7042655100
R37
47kΩ
R31
56kΩ
R20
10kΩ
R36
330kΩ
C18
0.011μF
C20
1μF/50V
C21
1μF/50V
R34
10kΩ
R45
100kΩ
R38
12kΩ
R21
10kΩ
R19
10kΩ
R43
10kΩ
IC4B
M5281AL
IC4A
M5281AL
R29
33kΩ
IC3A
M5281AL
IC3B
M5281AL
R32
15kΩ
R39
100kΩ
R28
10kΩ
C11
10μF/16V
C25
47μF/6.3V
R23
56kΩ
R44
100kΩ
R33
100kΩ
R25
56kΩ
R22
1MΩ
C23
470pF
C17
470pF
R24
1MΩ
2SC2458GR
2SC2458GR
Q5
Q7
C12
0.047μF
R30
56kΩ
R40
56KΩ
C13
0.047μF
C16
220pF
C22
220pF
EFFECT
ON/OFF
SW1
JN-0404
R25
1MΩ
R18
100Ω
P1
C15
0.01μF
P5
P6
9V BATTERY
JK1
HEC2392-01-150
D1
1N4004
+9V
D4
1N4004
C9
100μF/16V
R41
4.7kΩ
R42
5.6kΩ
C24
47μF/6.3V
R35
4,7kΩ
Q6
2SA1048GR
+5.5V
C19
47μF/6.3V
R13
10kΩ
R14
10kΩ
C10
4.7μF/6.3V
IC2B
M5281AL
+4.5V
IC2C
M5281AL
IC3C
M5281AL
IC4C
M5281AL
AC ADAPTOR