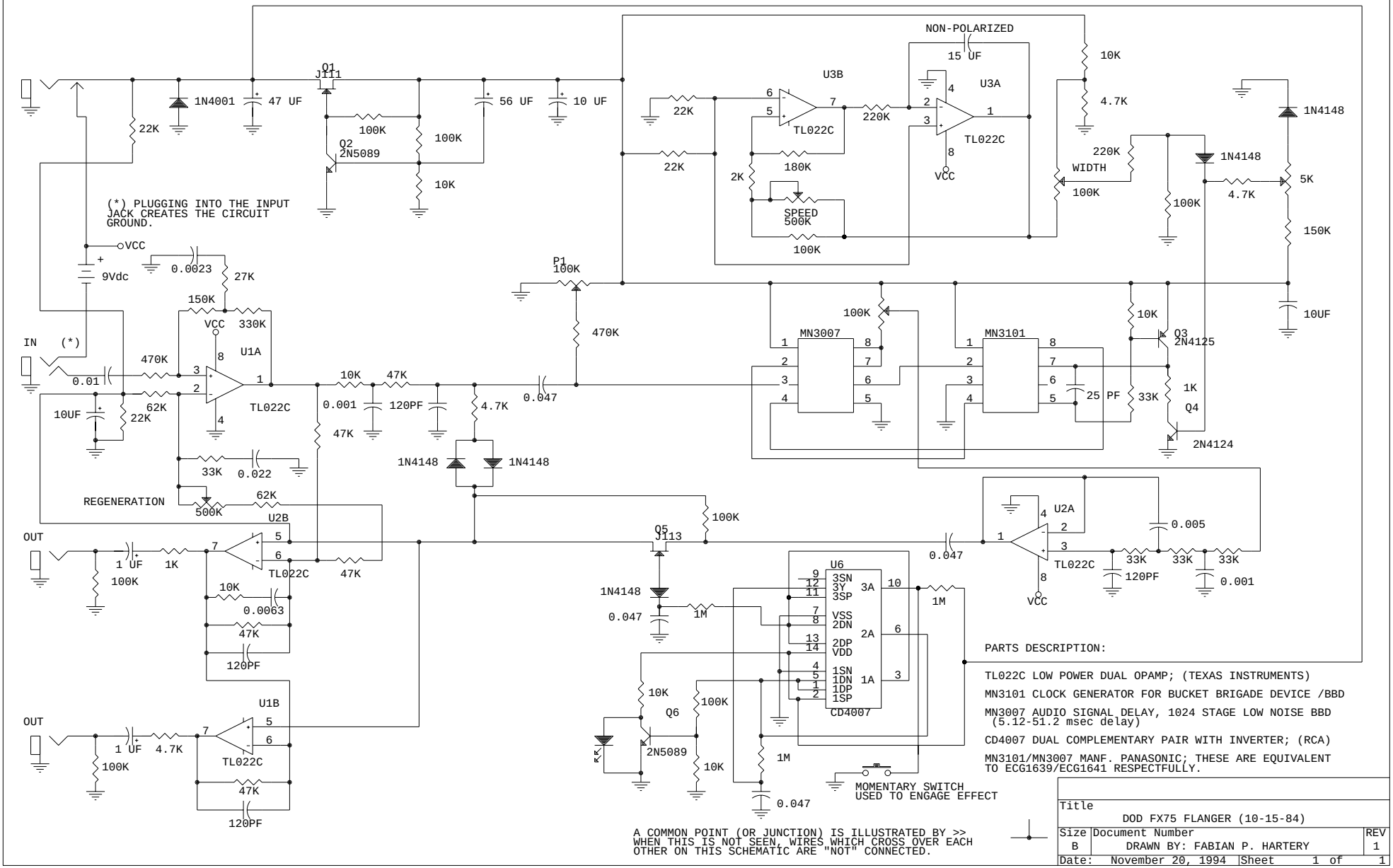

PARTS DESCRIPTION:

TL022C LOW POWER DUAL OPAMP; (TEXAS INSTRUMENTS)

MN3101 CLOCK GENERATOR FOR BUCKET BRIGADE DEVICE /BBD

MN3007 AUDIO SIGNAL DELAY, 1024 STAGE LOW NOISE BBD (5.12-51.2 msec delay)

CD4007 DUAL COMPLEMENTARY PAIR WITH INVERTER; (RCA)

MN3101/MN3007 MANF. PANASONIC; THESE ARE EQUIVALENT TO ECG1639/ECG1641 RESPECTFULLY.

Title	DOD FX75 FLANGER (10-15-84)	
Size B	Document Number DRAWN BY: FABIAN P. HARTERY	REV 1
Date: November 20, 1994	Sheet 1 of 1	