BASSMAN 135

THIS PRODUCT MANUFACTURED UNDER ONE OR MORE OF THE FOLLOWING U.S. PATENTS. #281778 #2973681, #192859 AND PATENTS PENDING.

NOTES:

1. VOLTAGES READ TO GROUND WITH V.T.V.M.
2. ALL RESISTORS 1/2 WATT 10% TOLERANCE IF NOT SPECIFIED
3. ALL CAPACITORS ARE AT LEAST 600V RATING IF NOT SPECIFIED.
4. (MV) ARE AC VOLTAGES, FOR TEST ASSISTANCE. DENOTES TYPICAL 100Hz SIGNAL REQUIRED TO PRODUCE 10 WATTS OUTPUT WITH ALL CONTROLS SET TO MAXIMUM

A. USES IN SOME VERSIONS.

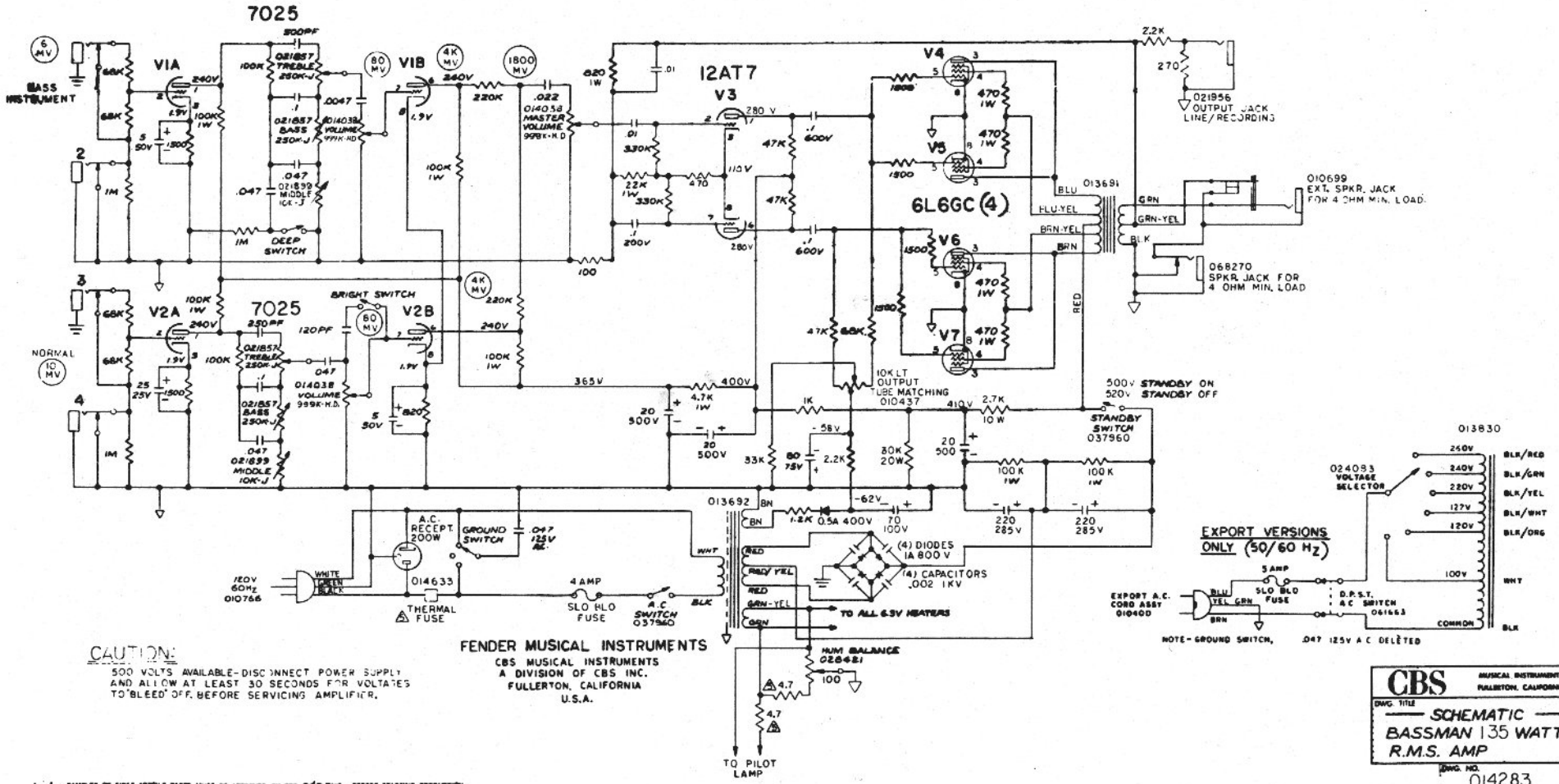

CAUTION:
500 VOLTS AVAILABLE - DISCONNECT POWER SUPPLY AND ALLOW AT LEAST 30 SECONDS FOR VOLTAGES TO "BLEED" OFF, BEFORE SERVICING AMPLIFIER.

FENDER MUSICAL INSTRUMENTS
CBS MUSICAL INSTRUMENTS
A DIVISION OF CBS INC.
FULLERTON, CALIFORNIA
U.S.A.

CBS MUSICAL INSTRUMENTS FULLERTON, CALIFORNIA

DWG. TITLE: SCHEMATIC BASSMAN 135 WATTS R.M.S. AMP

DWG. NO. 014283 REV 1

1 & 2 - SAMPLES OF FIRST ARTICLE PARTS MUST BE APPROVED BY CBS R&D DWG. BEFORE STARTING PRODUCTION.

NOTES: UNLESS OTHERWISE SPECIFIED