V1,2&3=12AX7 (4&5/9=H)

V4&5=6V6 (2&7=H)

V1 (pin1&6)= 153v V2 pin1=300v V2pin6=192v V3pin 1=176v V3pin6=225v V3pin8=52

A=423v B=406v C=299v D=286v E=284v

27k
2.2M
1M vol
10k
.47
25kl treble
4.7k
.02
1M bass
.001
220k
500p
250k reverb
SW
mstr vol 1M
E
16uf/500v
1k/3w
D
20uf/450v
4.7k/3w
20uf/450v
C
22k/3w
16uf/450v
B
2.2k/3w
10uf/450v
A
.02
V1
V2
V3
1M
100k
100k
.02
1.5k
A
2.2k3w
V4
10k
6AX5GT
47uf/100v
SW
300ohm
100k
.68uf
1.8k
2.2k
22uf
1M
500p
220k
22uf
1.5k
100k
220k
100k
56k
.02
56k
1M
D
C
D
E
all pots buss wired
V5
10k
2.2K/3w
BLU
C
T
RED
GRN
BLK
O/T
A = #4
#3 &5 = 6V6 plates
#7 white= 8 ohm
#1= ground
8 ohm
4 = HV center-tap
rectifier plate HV 2&6
5&9= 6.3vac
1&3 = 110VAC
P/T
22uf/50v
SW
47uf/35
fat/full SPDT center off
B
SW

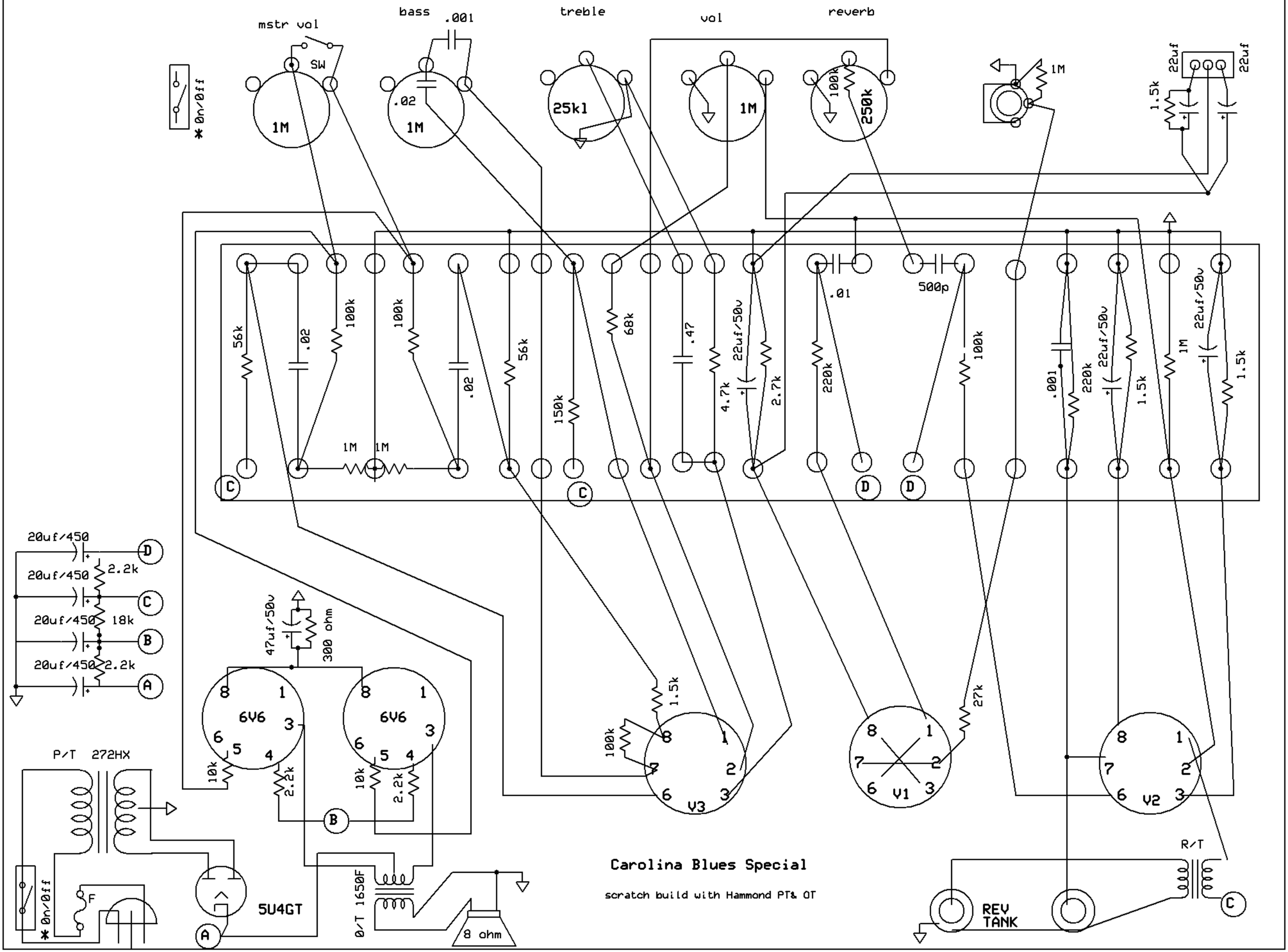

Carolina Blues Special

scratch build with Hammond PT& OT

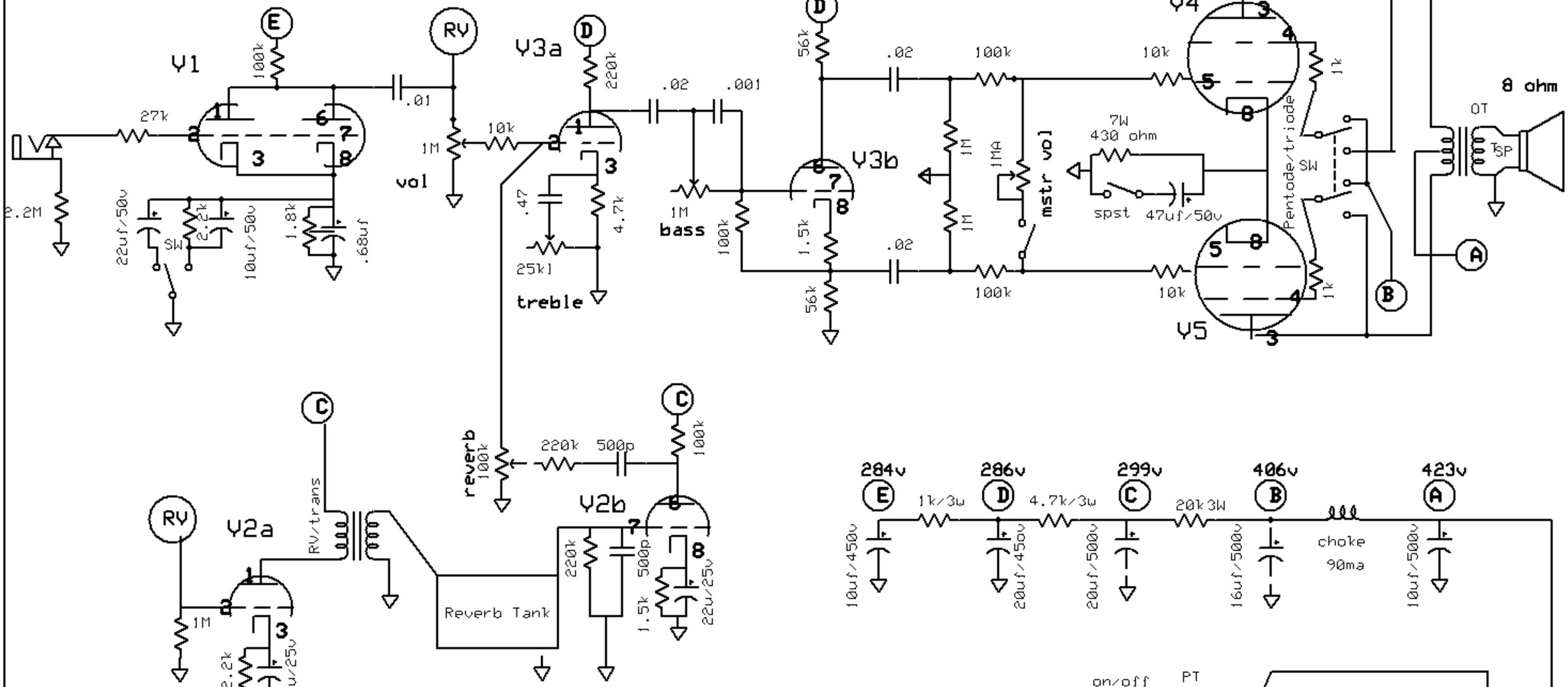

V1 12AX7	pin1 153v	pin1 153v
V2 12AX7	pin1 300v	pin6 192v
V3 12AX7	pin1 176v	pin6 225v
V4 6V6	pin3 423v	pin4 406v
V5 6V6	pin3 423v	pin4 406v

29.7v across 430 ohm resistor = 34.5ma

Carolina Blues Special

O/T

1) ground
2) 4 ohm
3) V3 pin3
4) node A/rectifier
5) V4 pin3
6) 245 ohm
7) 8 ohm white
8) 16 ohm

Bogen CHA-20 PT wiring

1) white and red wire/on-off
3) black wire/on-off
2) blue wire rectifier plate
6) blue wire rectifier plate
5) yellow rectifier/ heater
9) orange wire/rectifier heater
4) ground 7) ground 8) open 10) open