isc audio
40 Smith Street • Farmingdale, N. Y. 11735

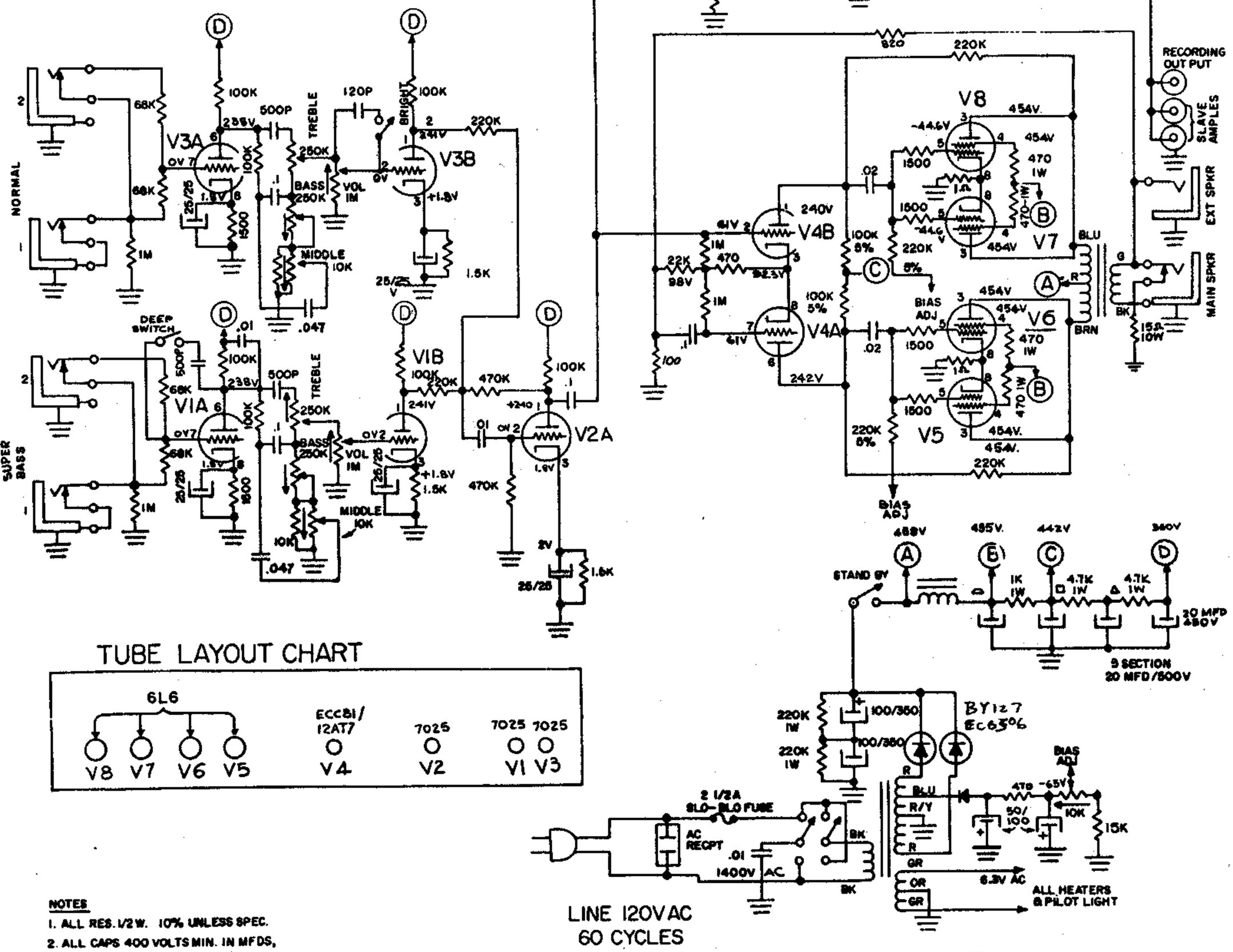

TUBE LAYOUT CHART

NOTES

1. ALL RES. 1/2 W. 10% UNLESS SPEC.
2. ALL CAPS 400 VOLTS MIN. IN MFDS, UNLESS SPEC (MFDS/VOLTS)
3. —ARROW AT CONTROLS DENOTES CW DIRECTION
4. ALL MEASUREMENTS TAKEN W/CONTROLS

B - 2000 SUPER BASS