Phaser / PH-D

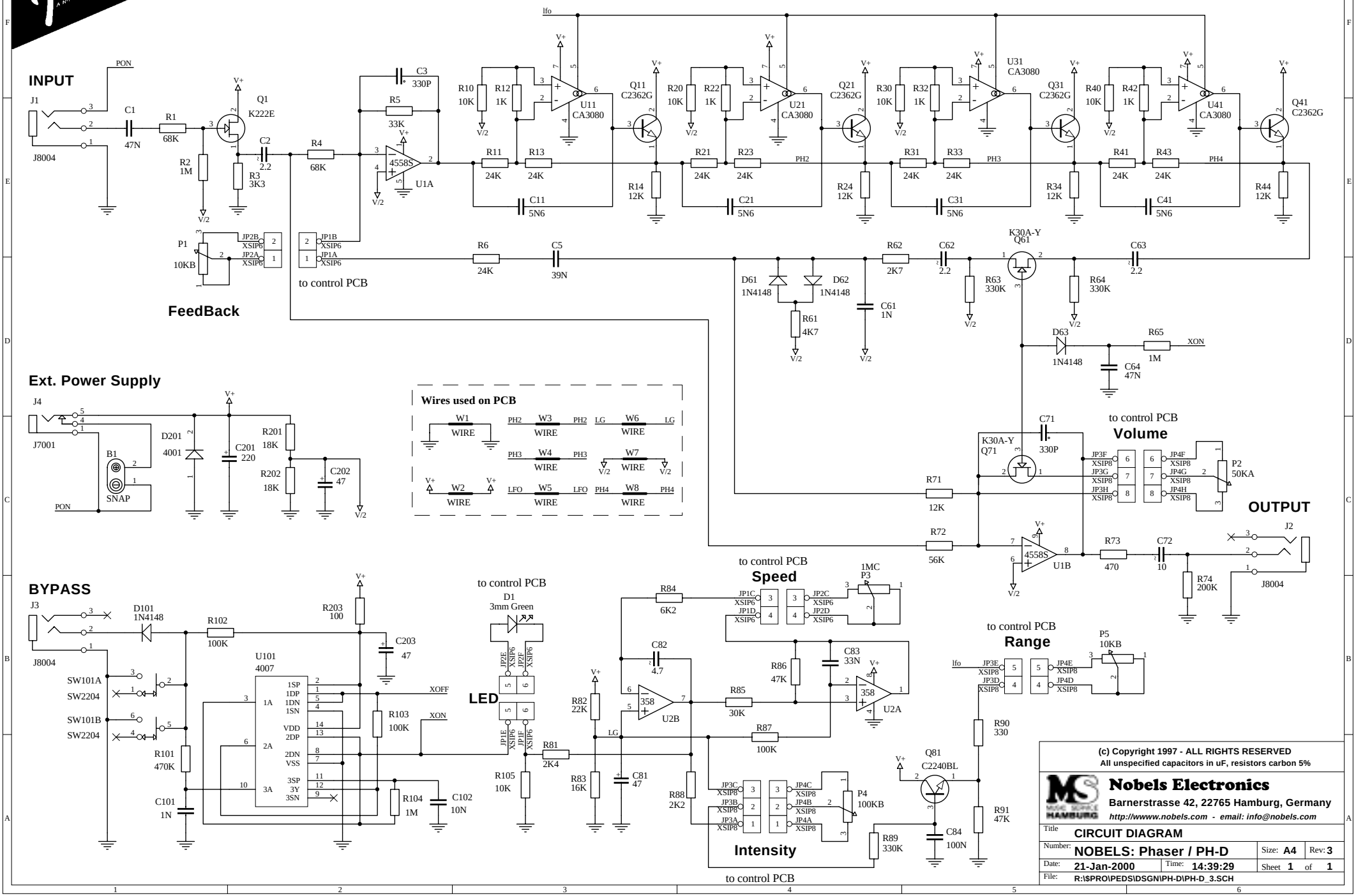

(c) Copyright 1997 - ALL RIGHTS RESERVED

All unspecified capacitors in uF, resistors carbon 5%

Nobels Electronics
Barnerstrasse 42, 22765 Hamburg, Germany
http://wwww.nobels.com - email: info@nobels.com

Title	CIRCUIT DIAGRAM		
Number:	NOBELS: Phaser / PH-D	Size: A4	Rev: 3
Date: 21-Jan-2000	Time: 14:39:29	Sheet 1 of 1	
File:	R:\$PRO\PEDS\DSGN\PH-D\PH-D_3.SCH		